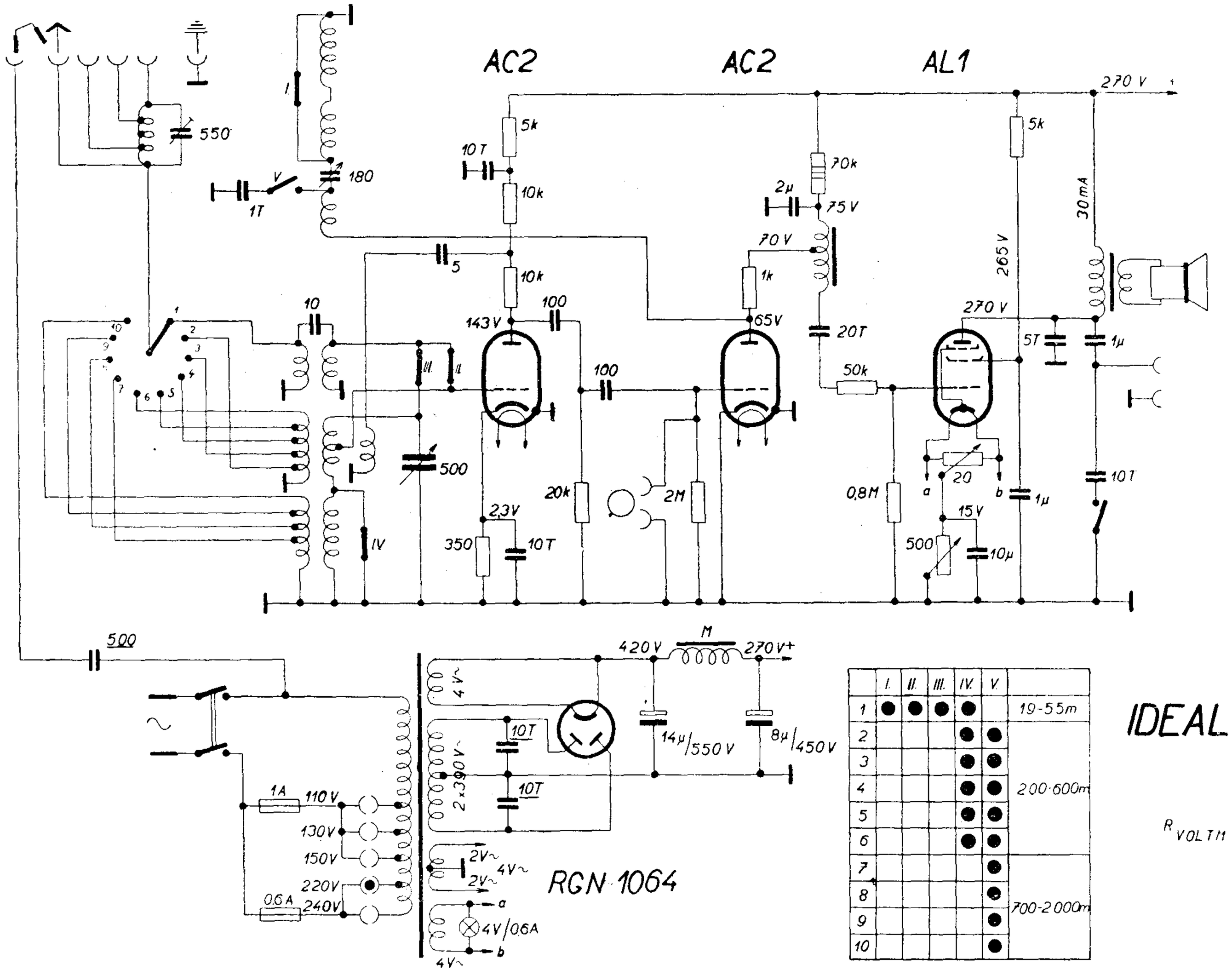

IDEAL RADIO IR 31

1935/36

$R_{VOLTM} = 333\Omega/V$