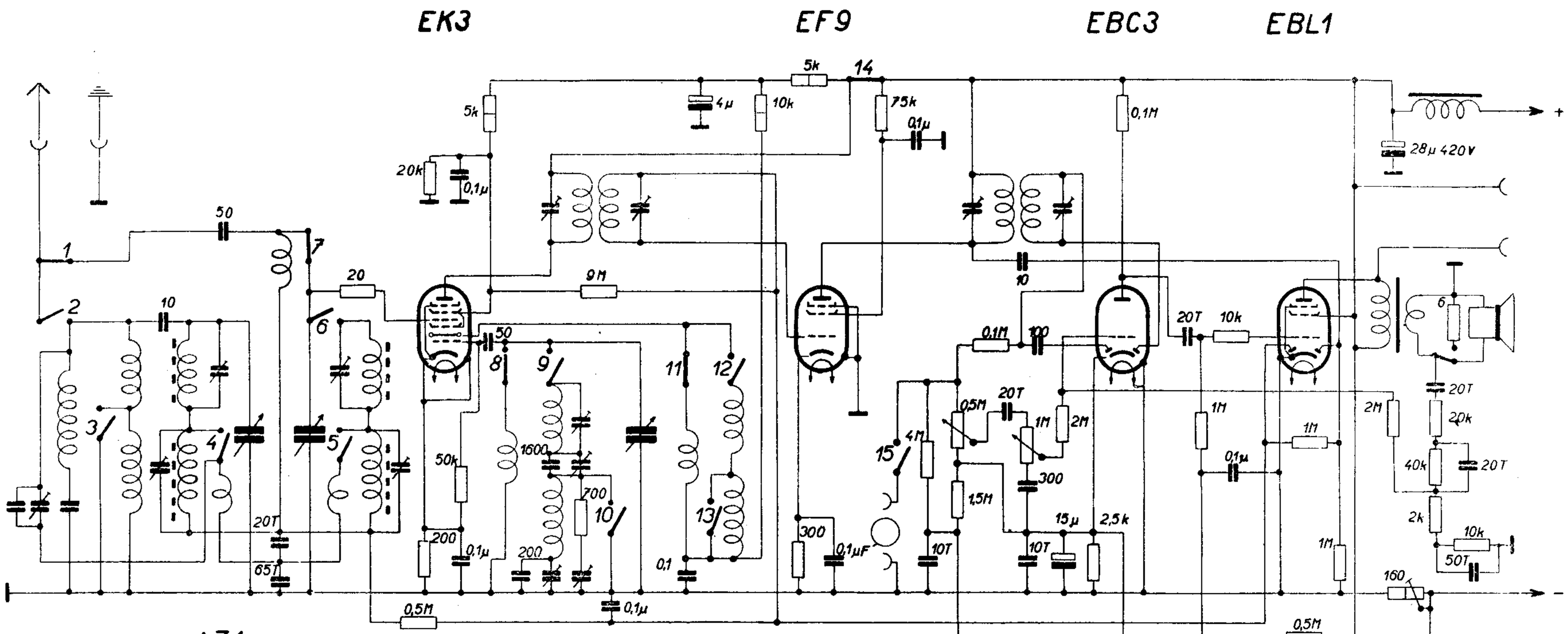

	1	2	3	4	5	6	7	8	9	10	11	12	13	14	15	16	17	18
15 - 50m	●						●	●			●			●		●		
200 - 600m		●	●	●	●	●			●	●		●	●	●			●	
750 - 2000m		●				●			●			●		●				●
○													●		●	●	●	●

IRON GAMMA

1938/39 MF=124 kHz