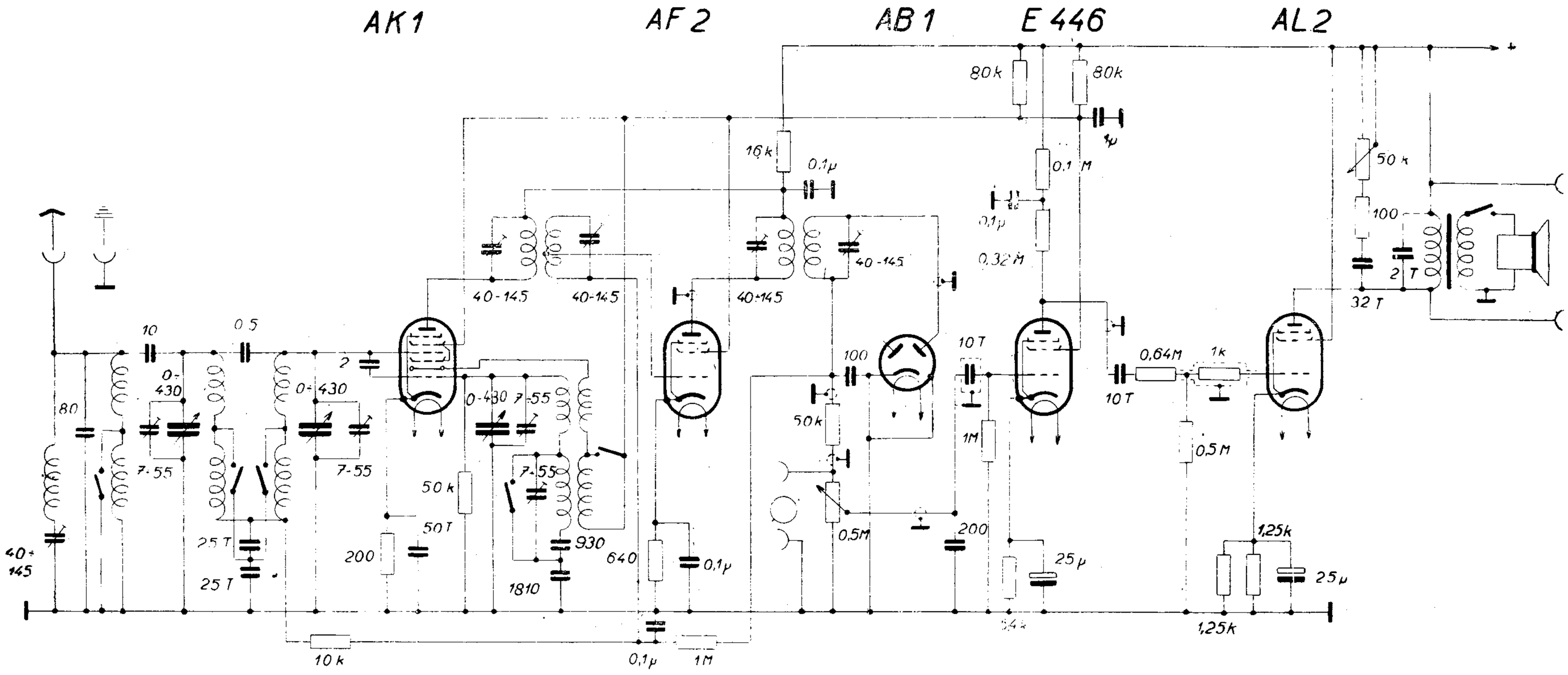

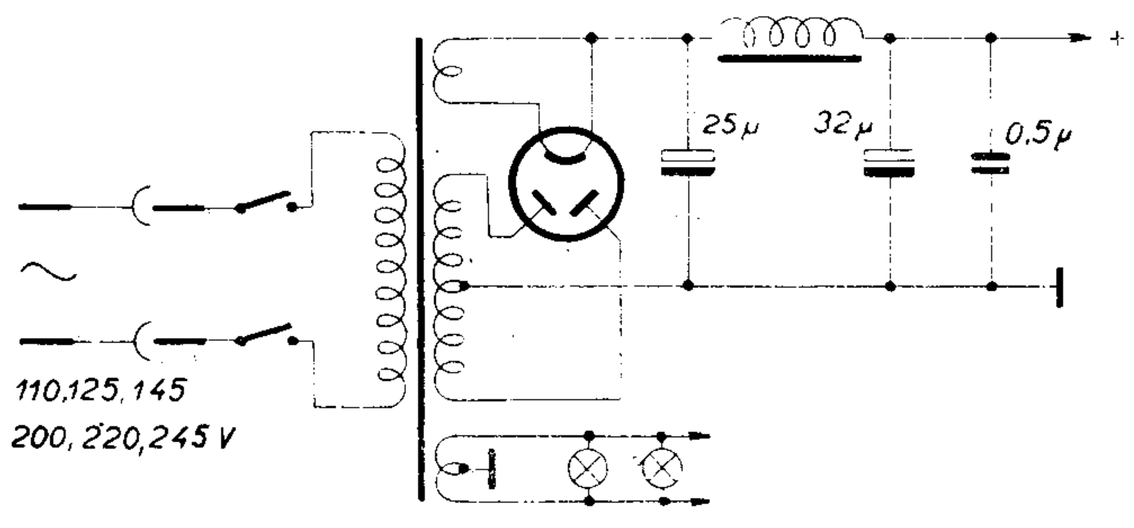

506

200 550 m	—
760 - 1900 m	⁄

PHILIPS JUPITER 525 A

1935/36

MF = 115 kHz