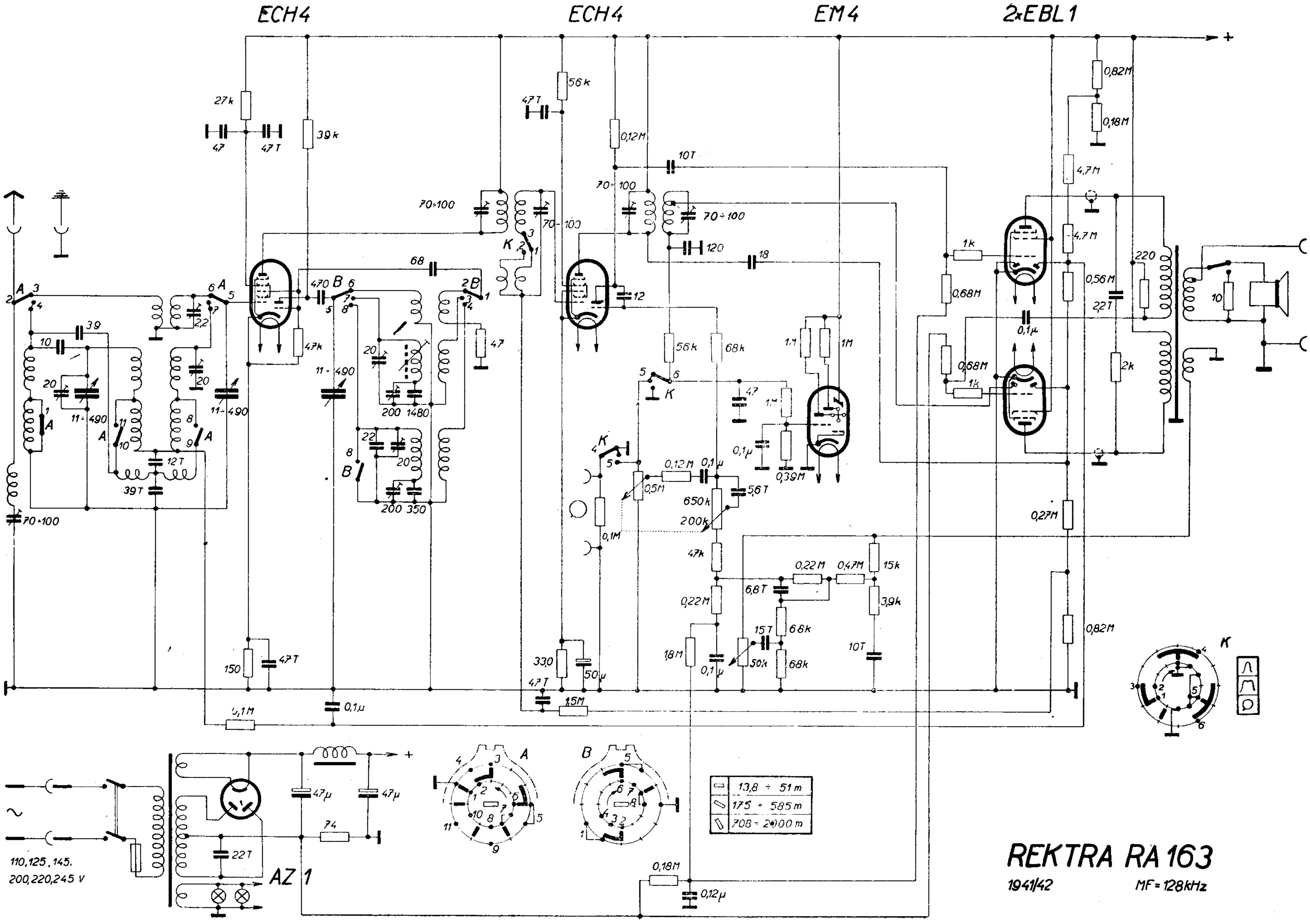
ECH4
ECH4
EM4
2xEBL1
AZ 1
110,125,145,
200,220,245 V
13,8 ÷ 51 m
175 ÷ 585 m
708 ÷ 2000 m
REKTRA RA 163
1941/42
MF = 128kHz