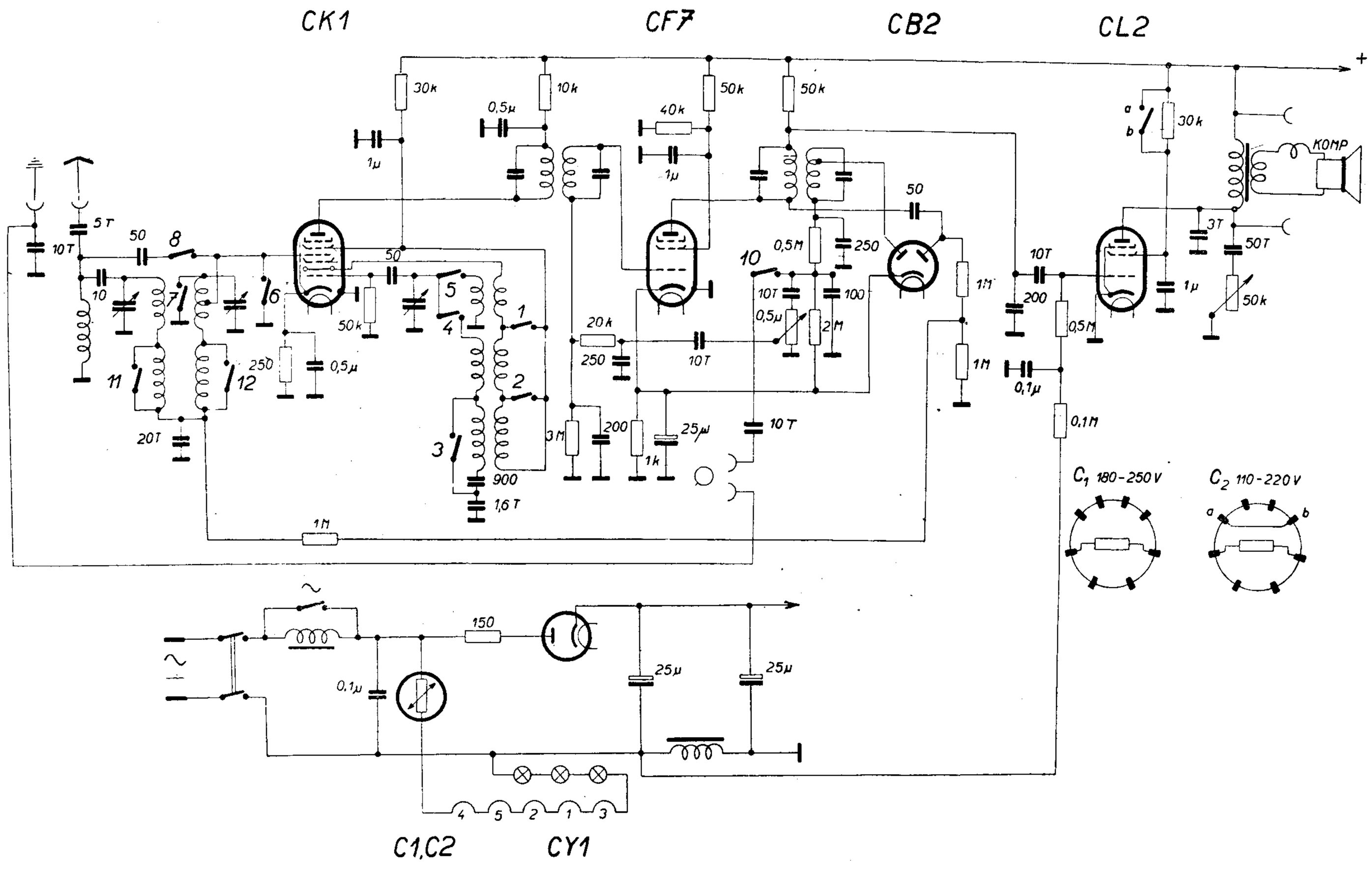

REL GLADIATOR 470U

1935/36 MF = 132 kHz