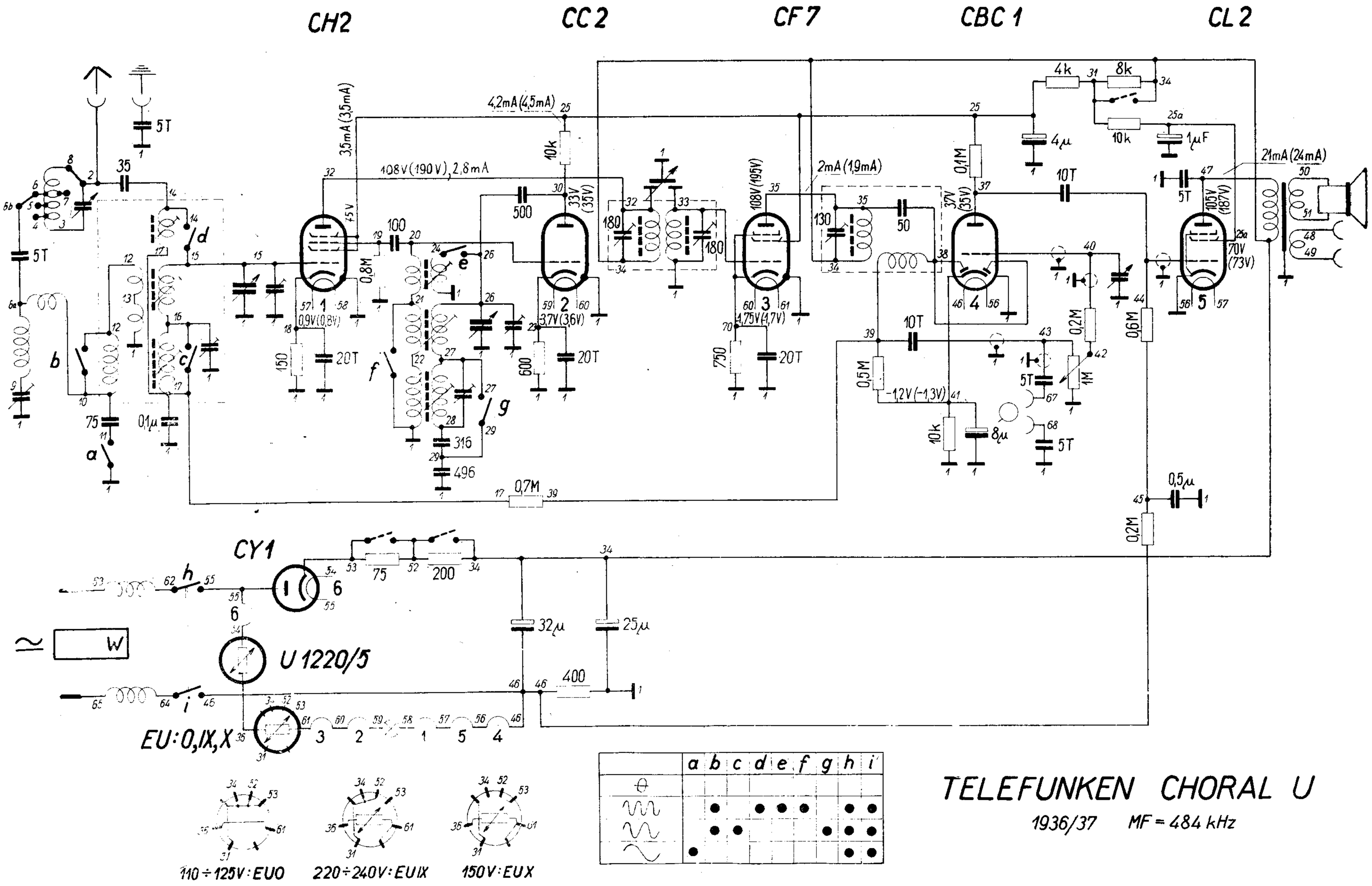

	a	b	c	d	e	f	g	h	i
θ									
∿∿		●		●	●	●		●	●
∿		●	●				●	●	●
~	●							●	●

TELEFUNKEN CHORAL U

1936/37 MF = 484 kHz